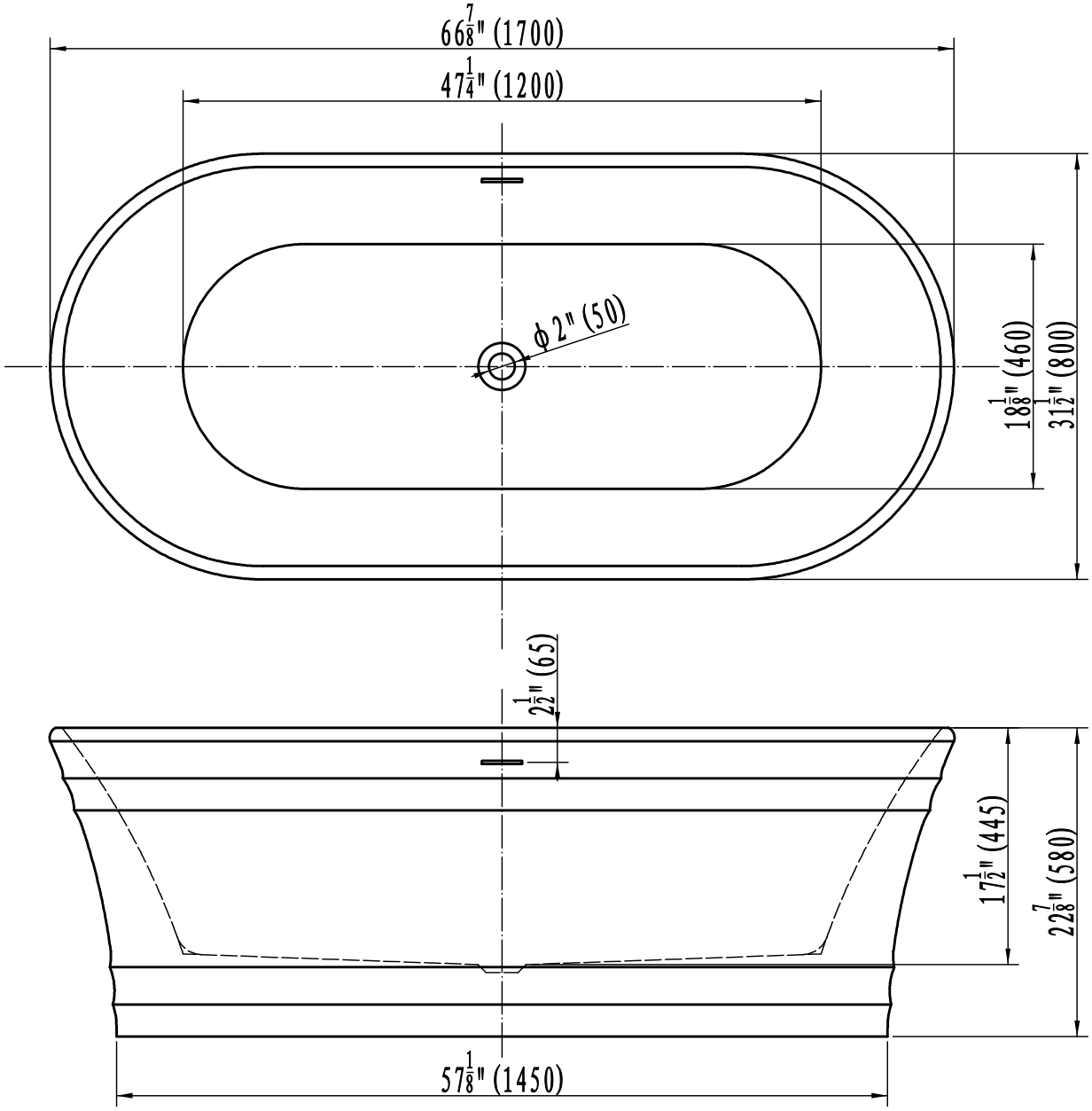
66 7/8" (1700)
47 1/4" (1200)
ϕ 2" (50)
18 1/8" (460)
31 1/2" (800)
2 1/2" (65)
17 1/2" (445)
22 7/8" (580)
57 1/8" (1450)

172101

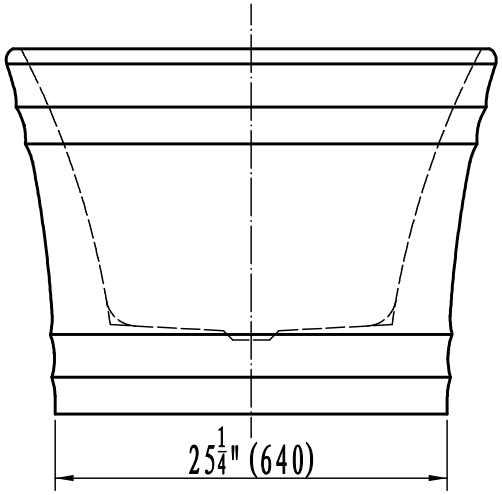
25 1/4" (640)