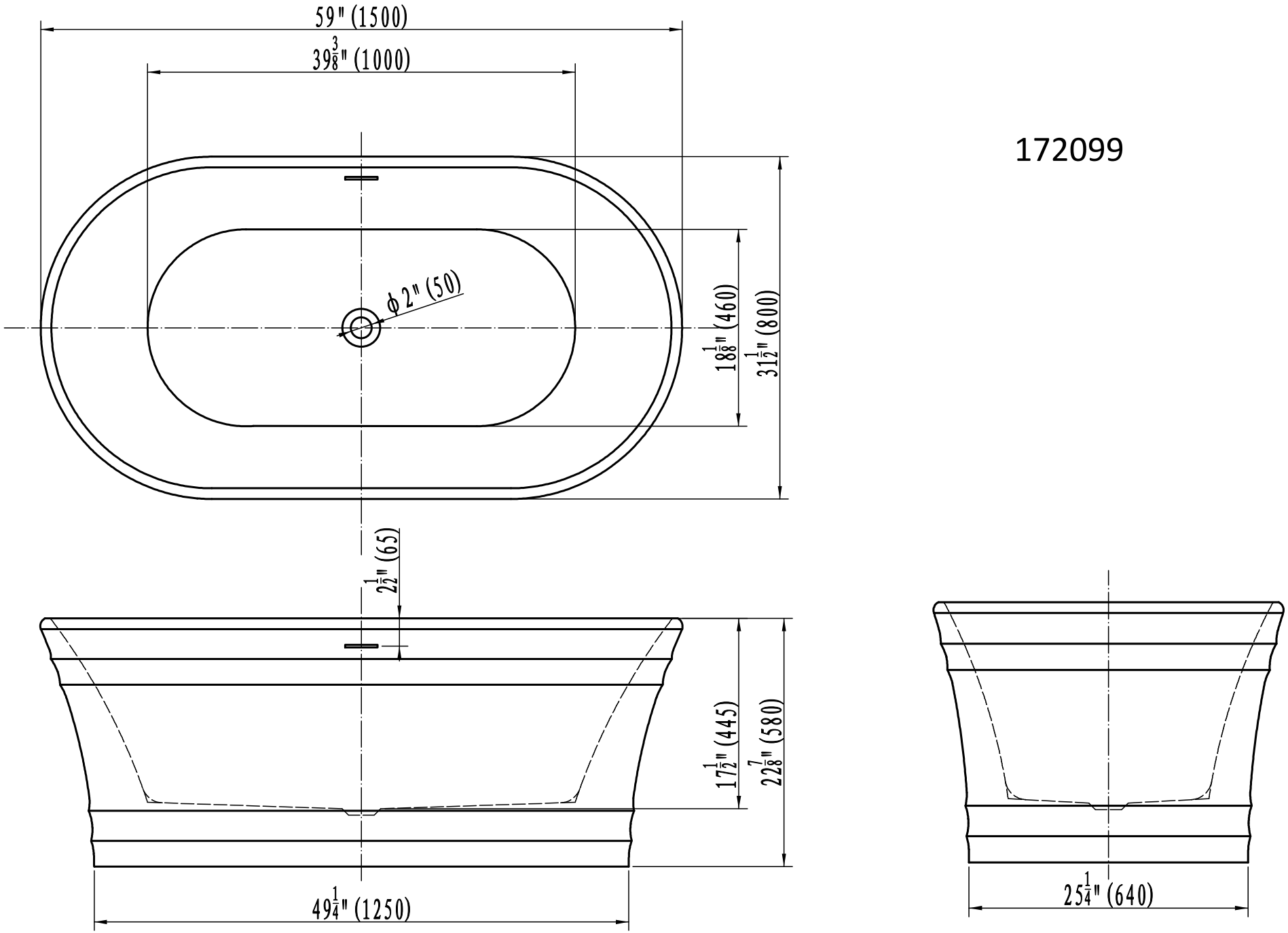
59" (1500)
39 3/8" (1000)
ϕ2" (50)
18 1/8" (460)
31 1/2" (800)
2 1/2" (65)
17 1/2" (445)
22 7/8" (580)
49 1/4" (1250)
25 1/4" (640)

172099